P

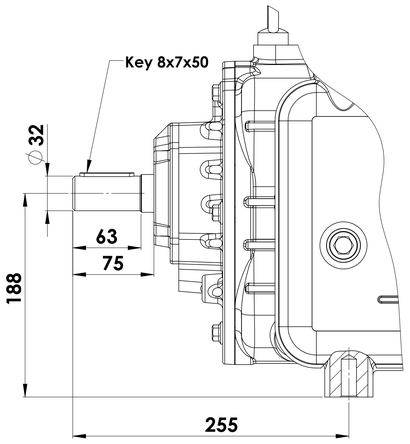

D

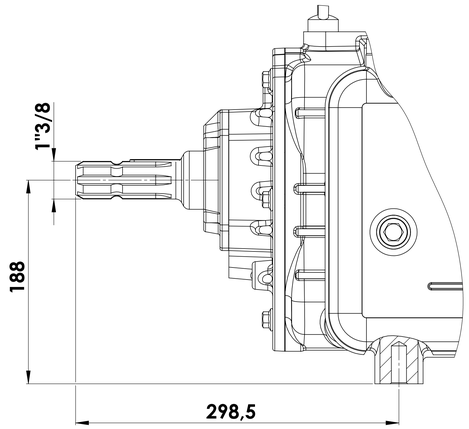

H

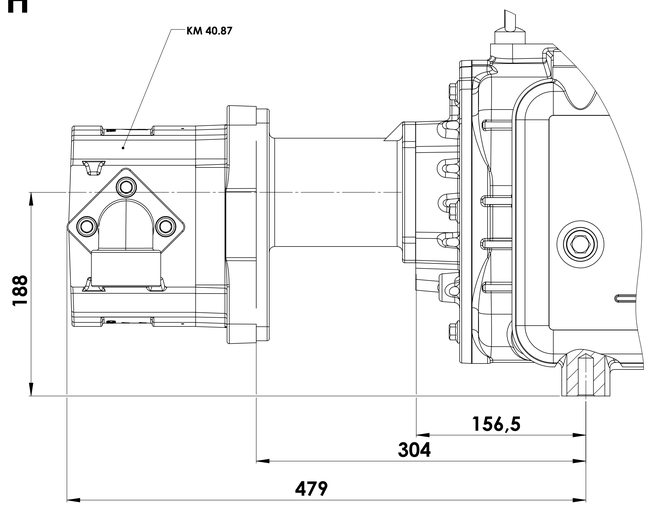

GA

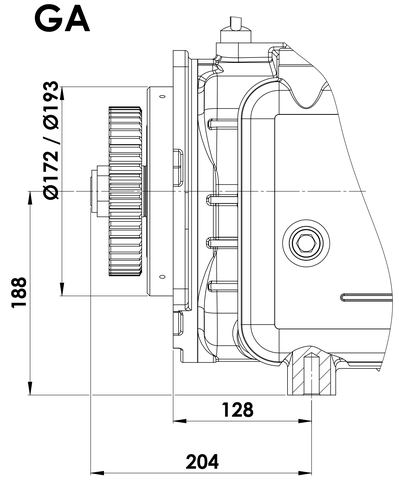

H-elastic joint coupling

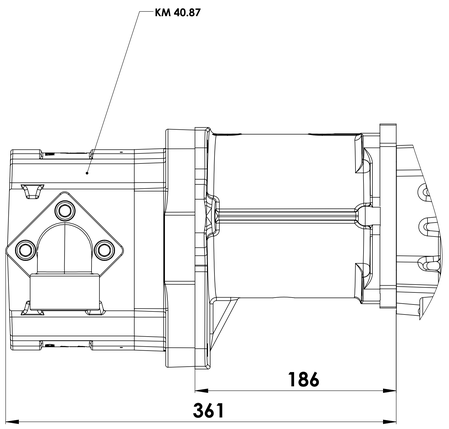
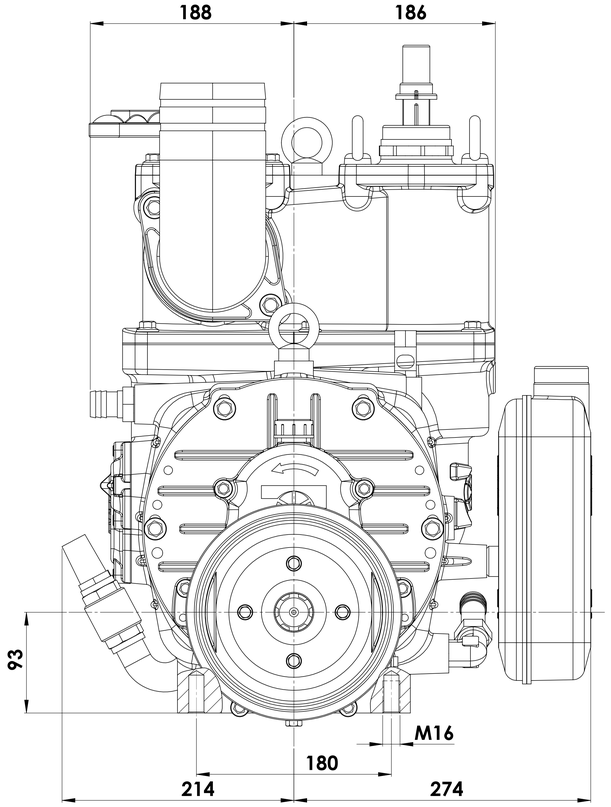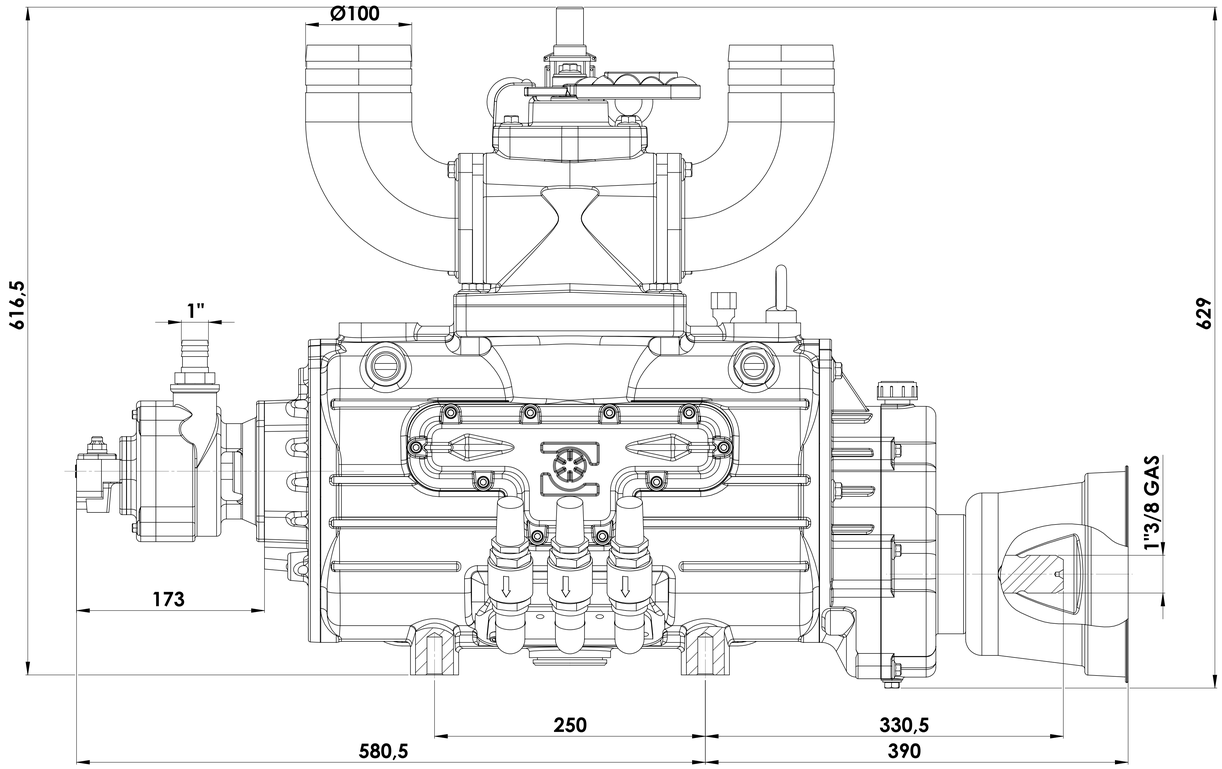
M-MA