Catalogo generale ricambi
General spare parts catalogue
Catalogue générale des piéces de rechange
Ersatzteile-katalog
Catálogo de piezas

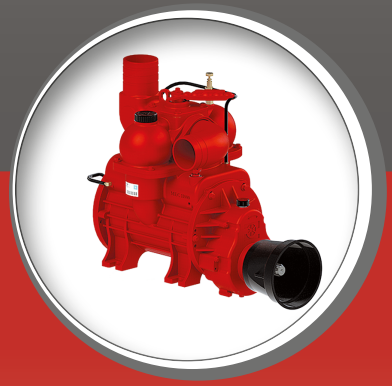

Battioni ®
Pagani

Setting the pace since 1953

2021

Rev. 0 del 01.05.2021

Battioni Pagani ®

KPS 550-670 / M - MA

Rev. 0 - 01/05/2021

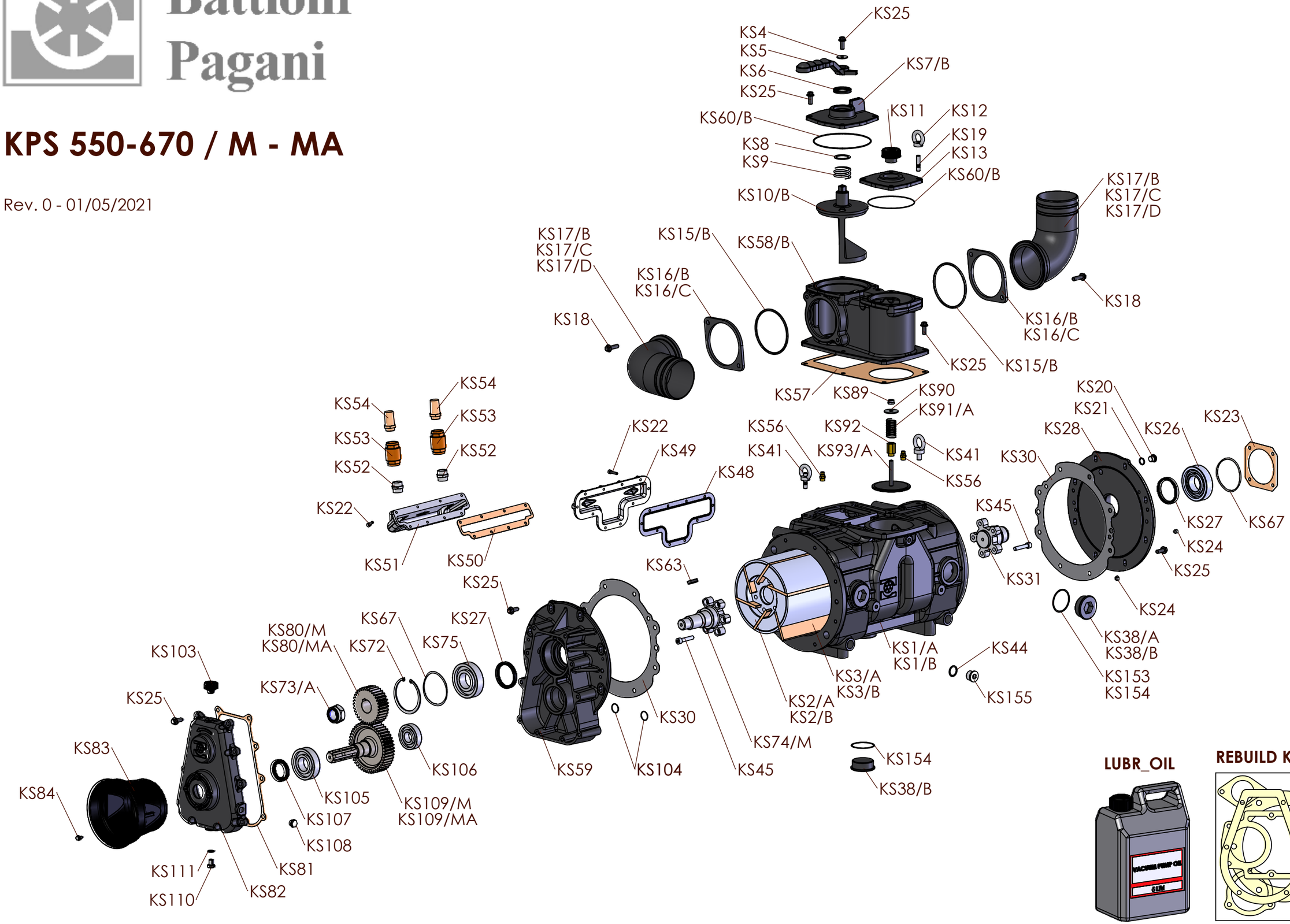

Battioni ®
Pagani

KPS 550-670 / P

Rev. 0 - 01/05/2021

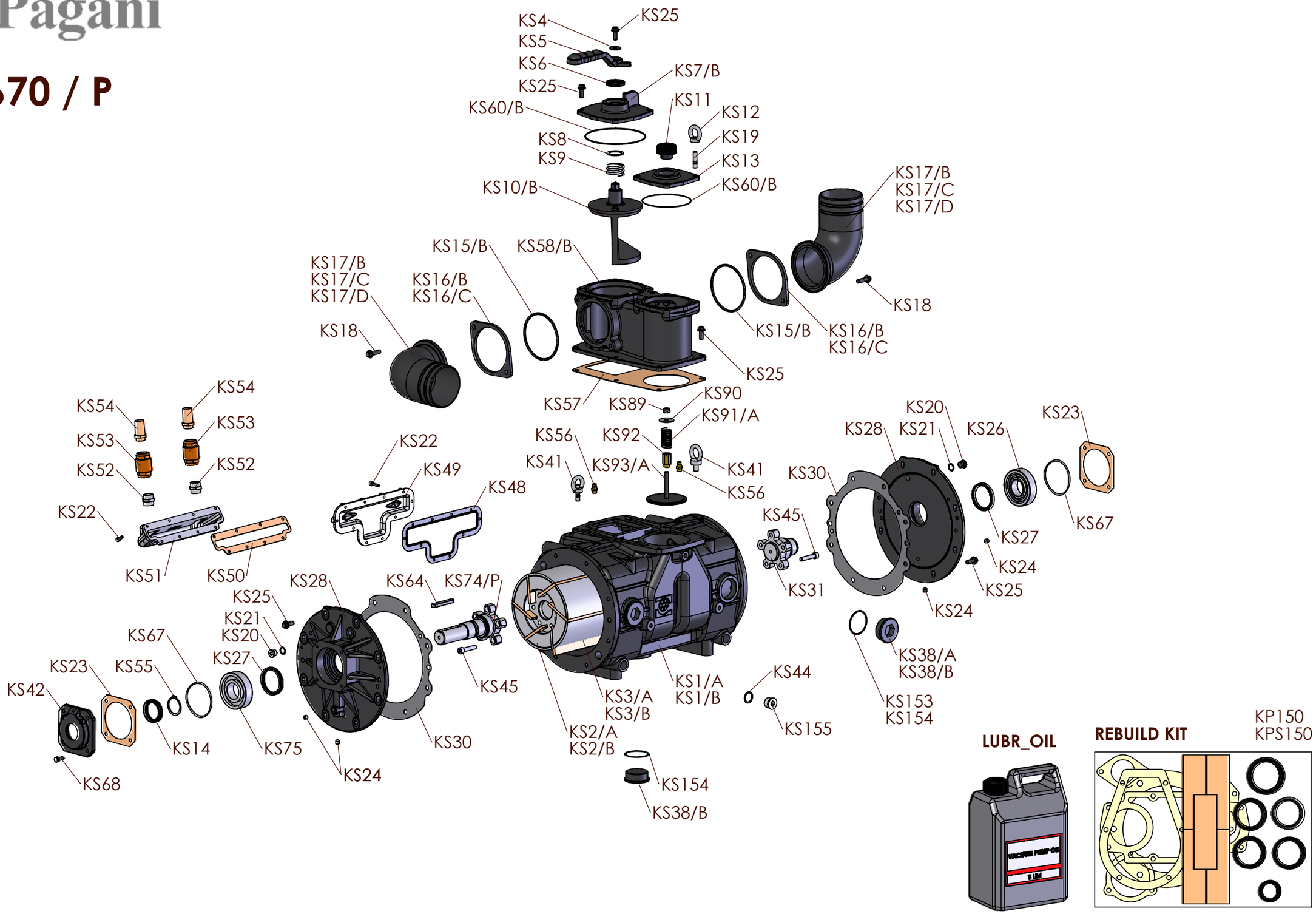

LUBR_OIL

REBUILD KIT

KP150
KPS150

Battioni Pagani ®

KPS 550-670 / D

Rev. 0 - 01/05/2021

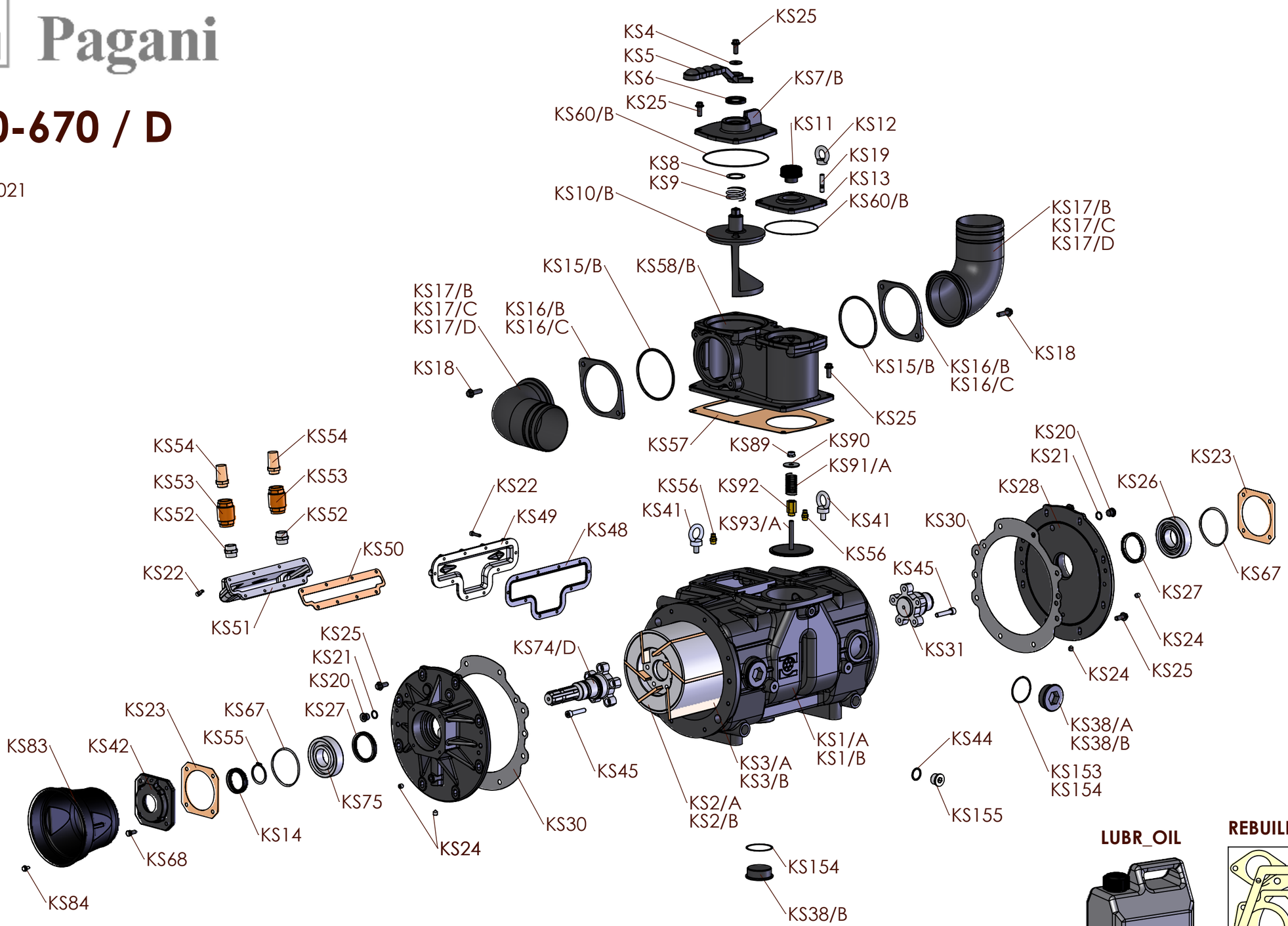

LUBR_OIL

REBUILD KIT

KP150
KPS150

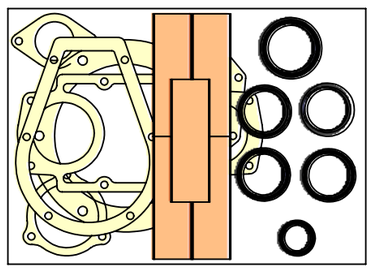

Battioni Pagani ®

KPS 550-670 / H

Rev. 0 - 01/05/2021

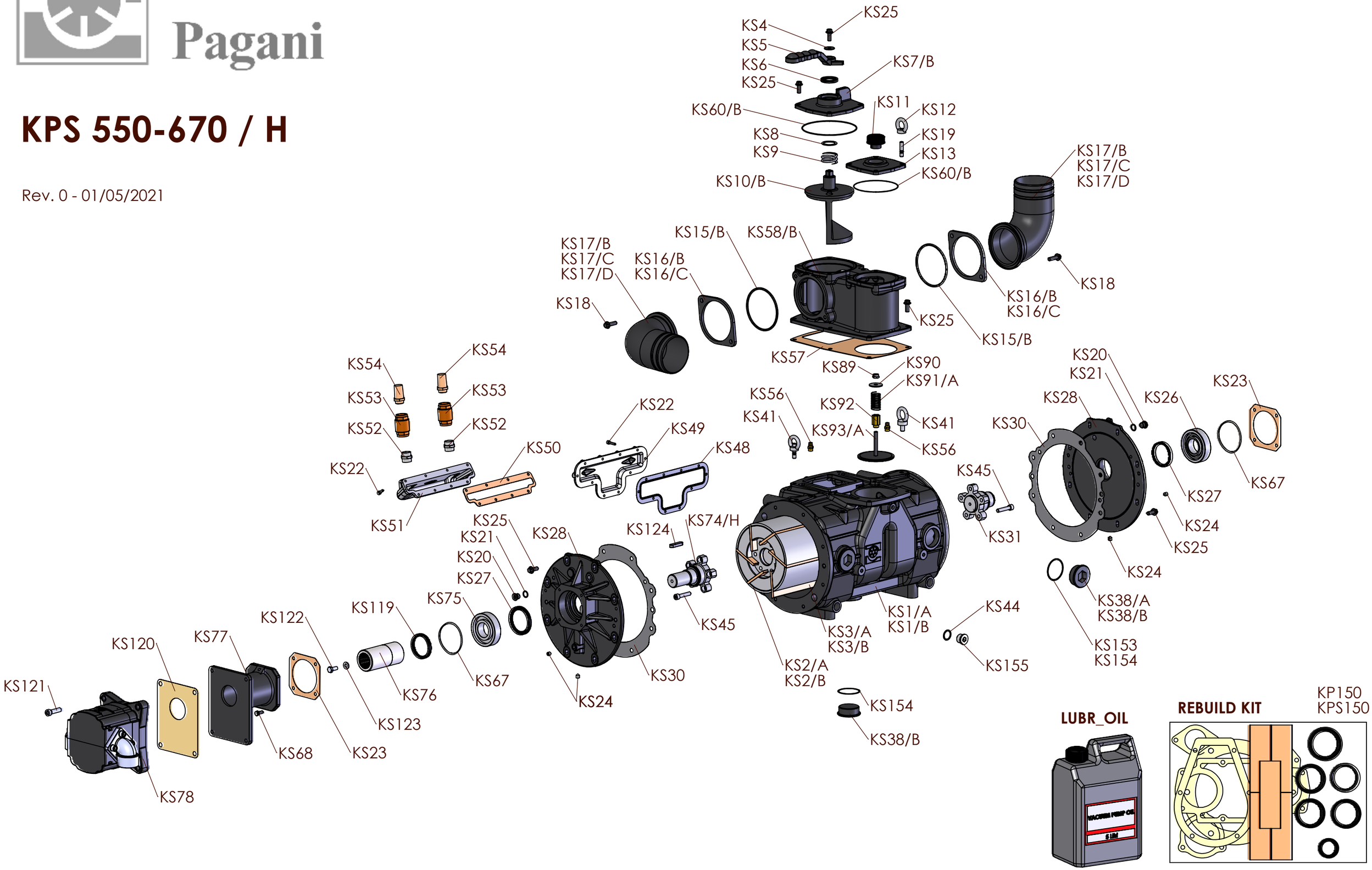

Battioni Pagani ®

KPS 550-670 / K - KA

Rev. 0 - 01/05/2021

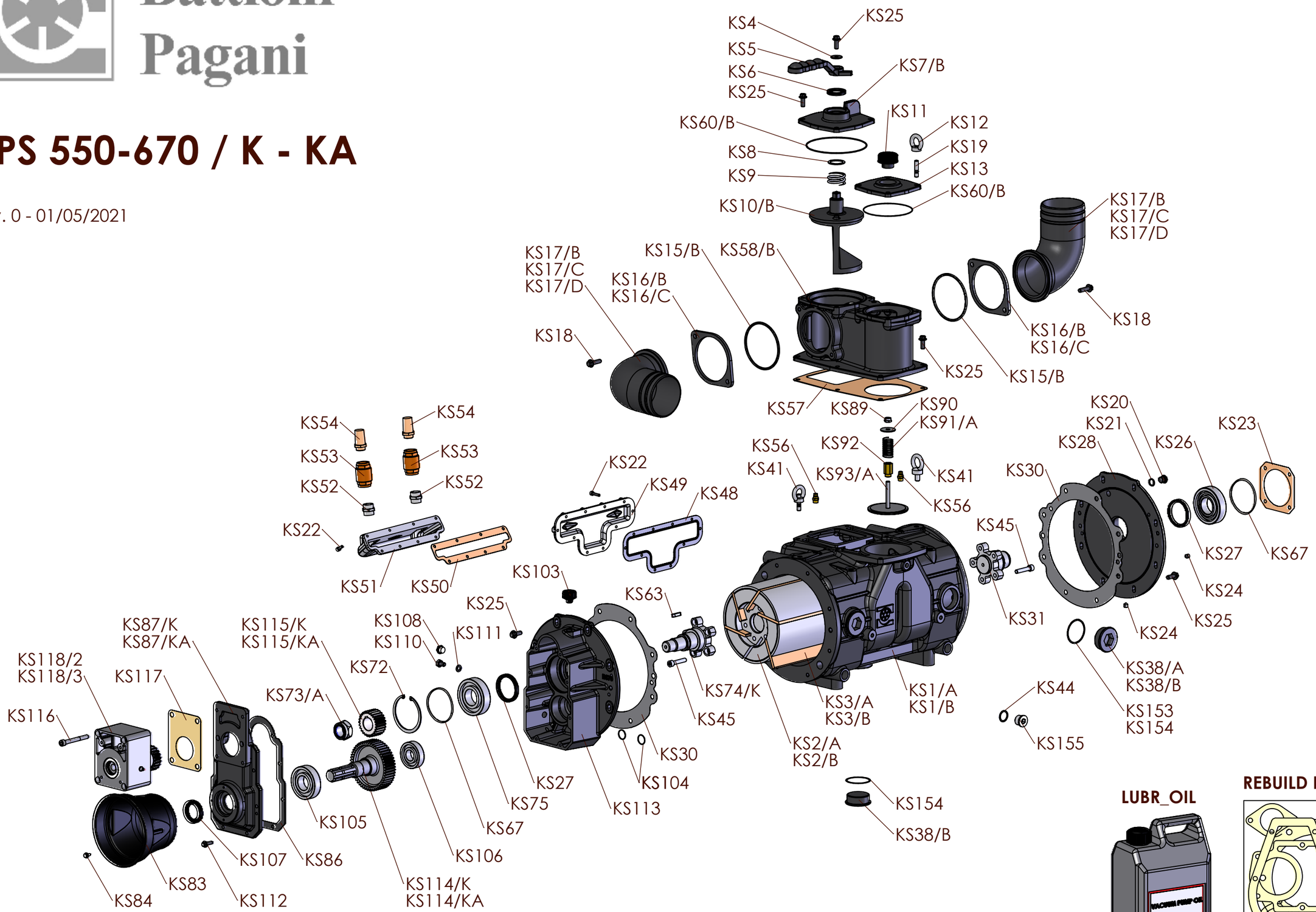

LUBR_OIL

REBUILD KIT

KP150
KPS150

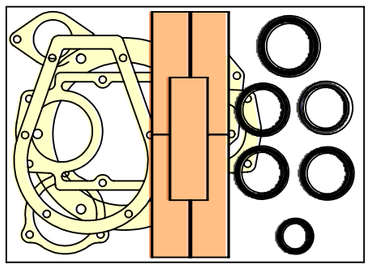

Battioni Pagani ®

KPS 550-670 / G-GA

Rev. 0 - 01/05/2021

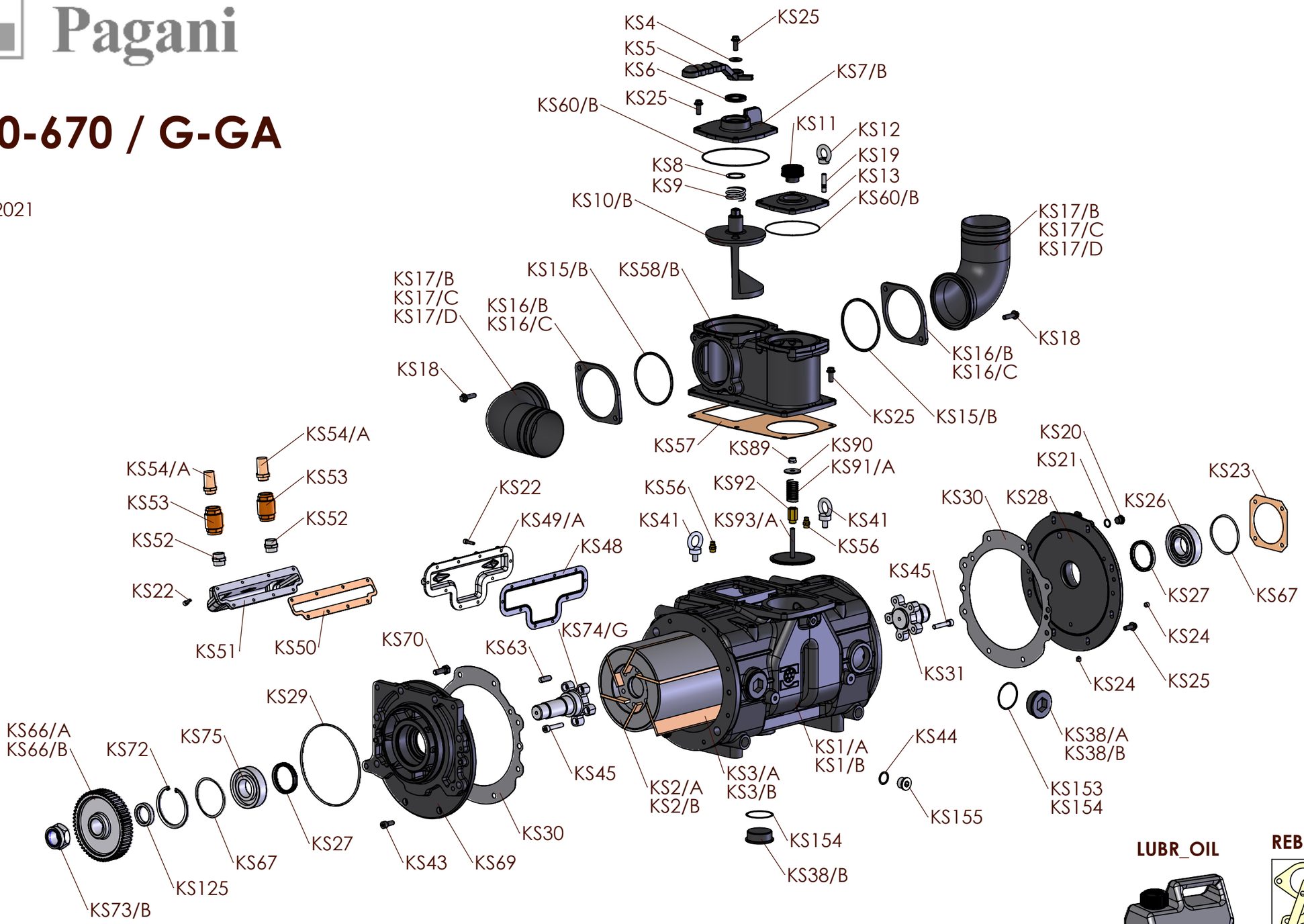

LUBR_OIL

REBUILD KIT

KP150
KPS150

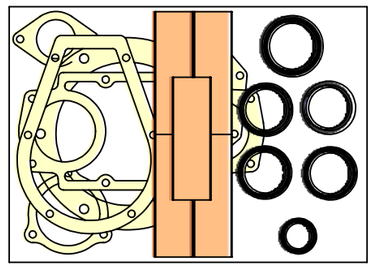

Battioni ®
Pagani

KPS 550-670 / GA
GARDA EVO WITH TWO LEVERS

Rev. 0 - 01/05/2021

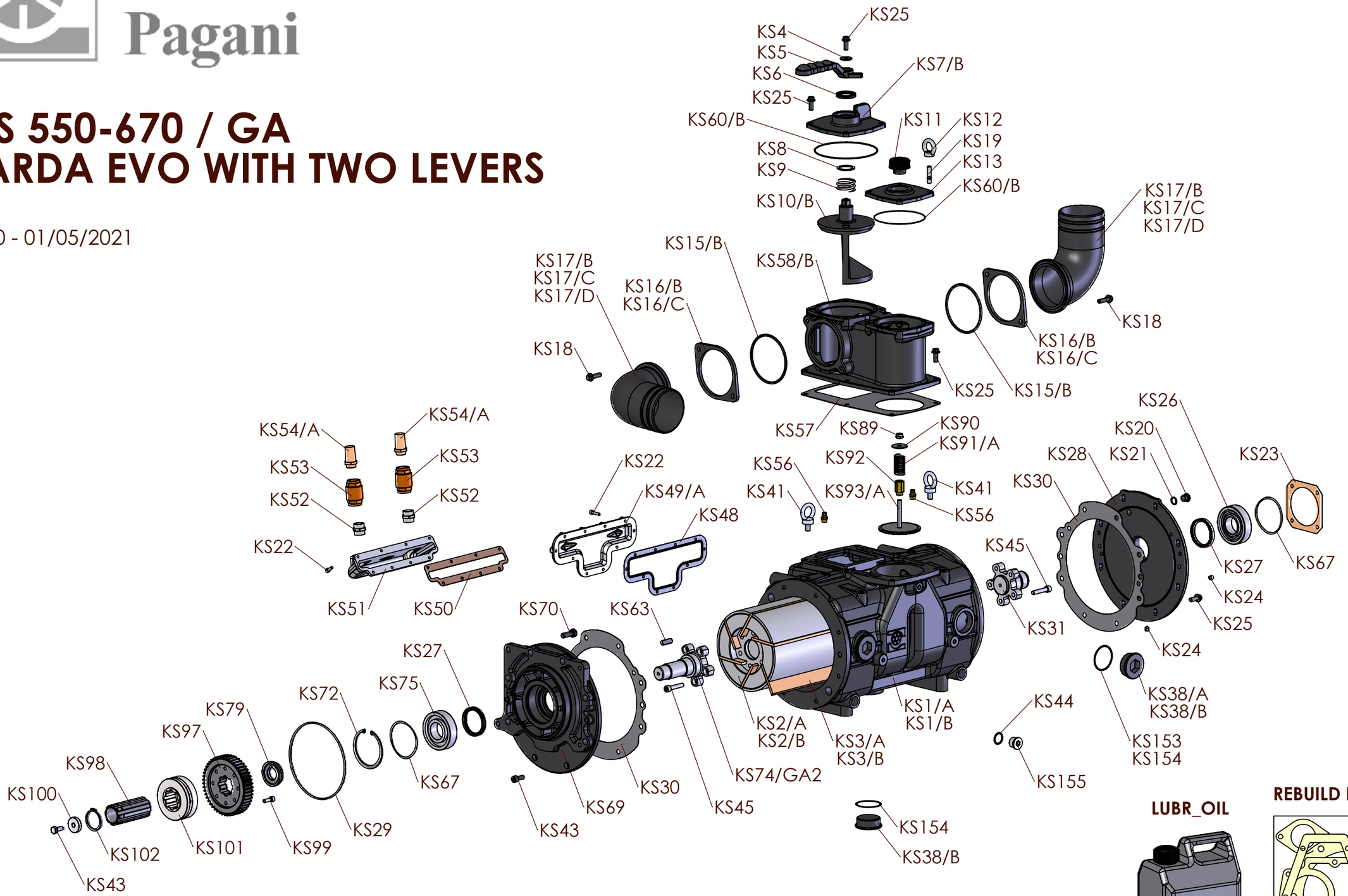

LUBR_OIL

REBUILD KIT

KP150
KPS150

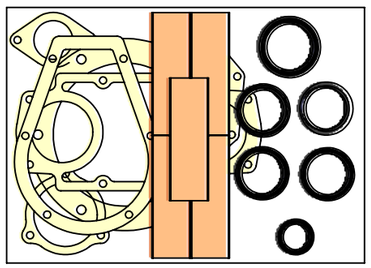

Battioni Pagani ®

KPS 550-670 / P - ATEX

Rev. 0 - 01/05/2021

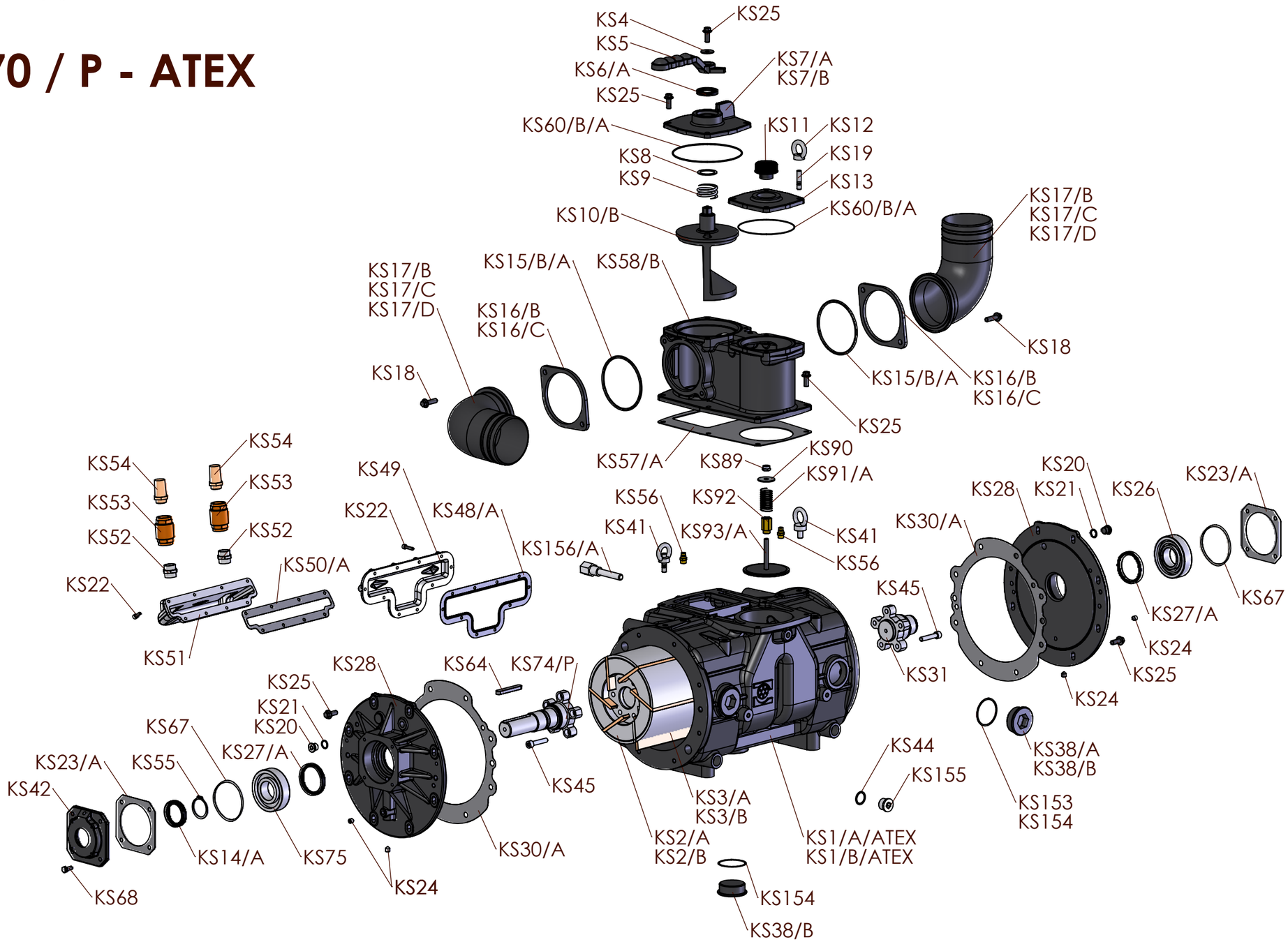

LUBR_OIL

Battioni Pagani ®

KPS 550-670 / H - ATEX

Rev. 0 - 01/05/2021

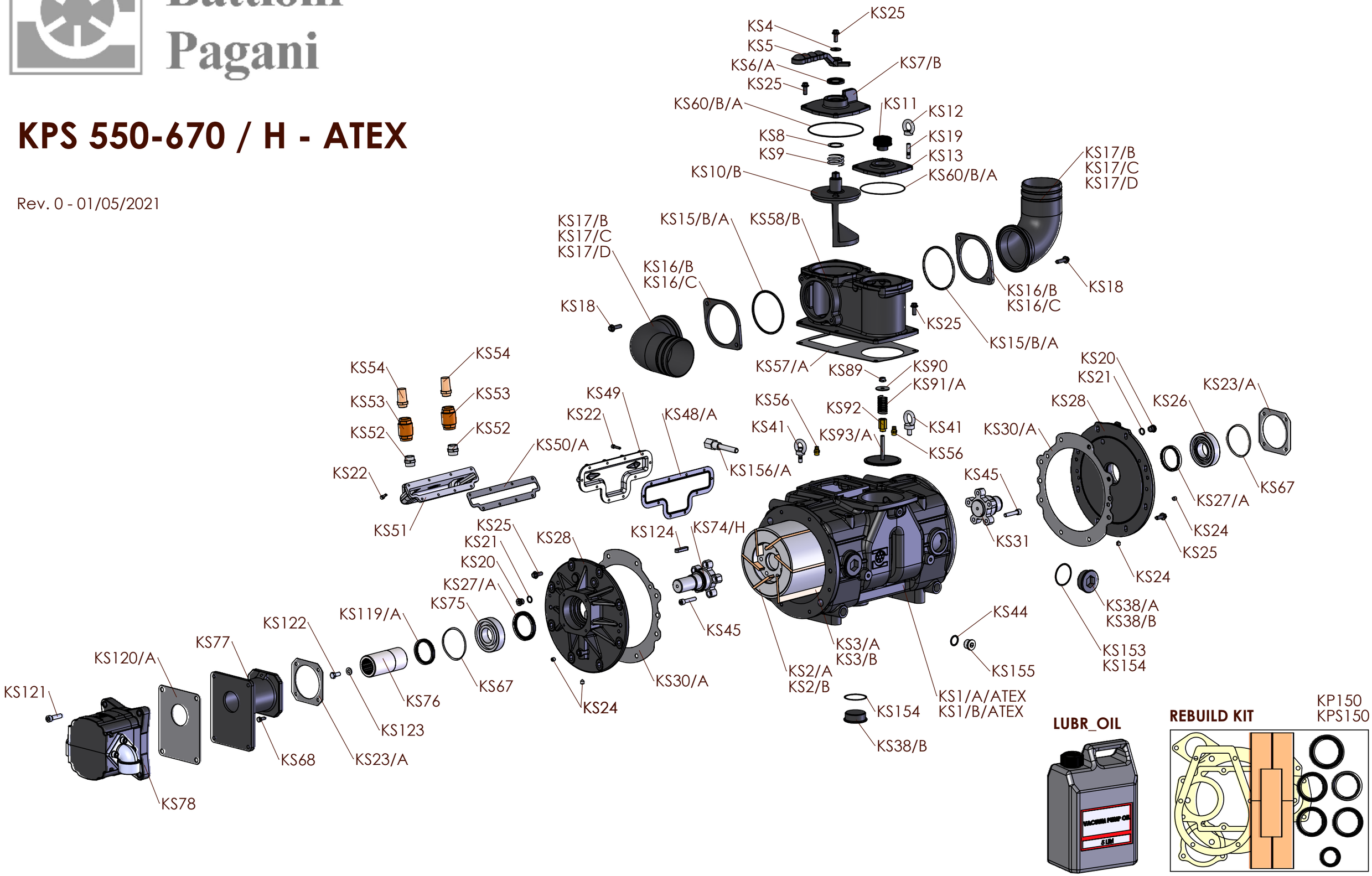

Battioni ®
Pagani

COOLING L.A.
KPS 550-670 / M-MA-K-KA-G-GA

Rev. 0 - 01/05/2021

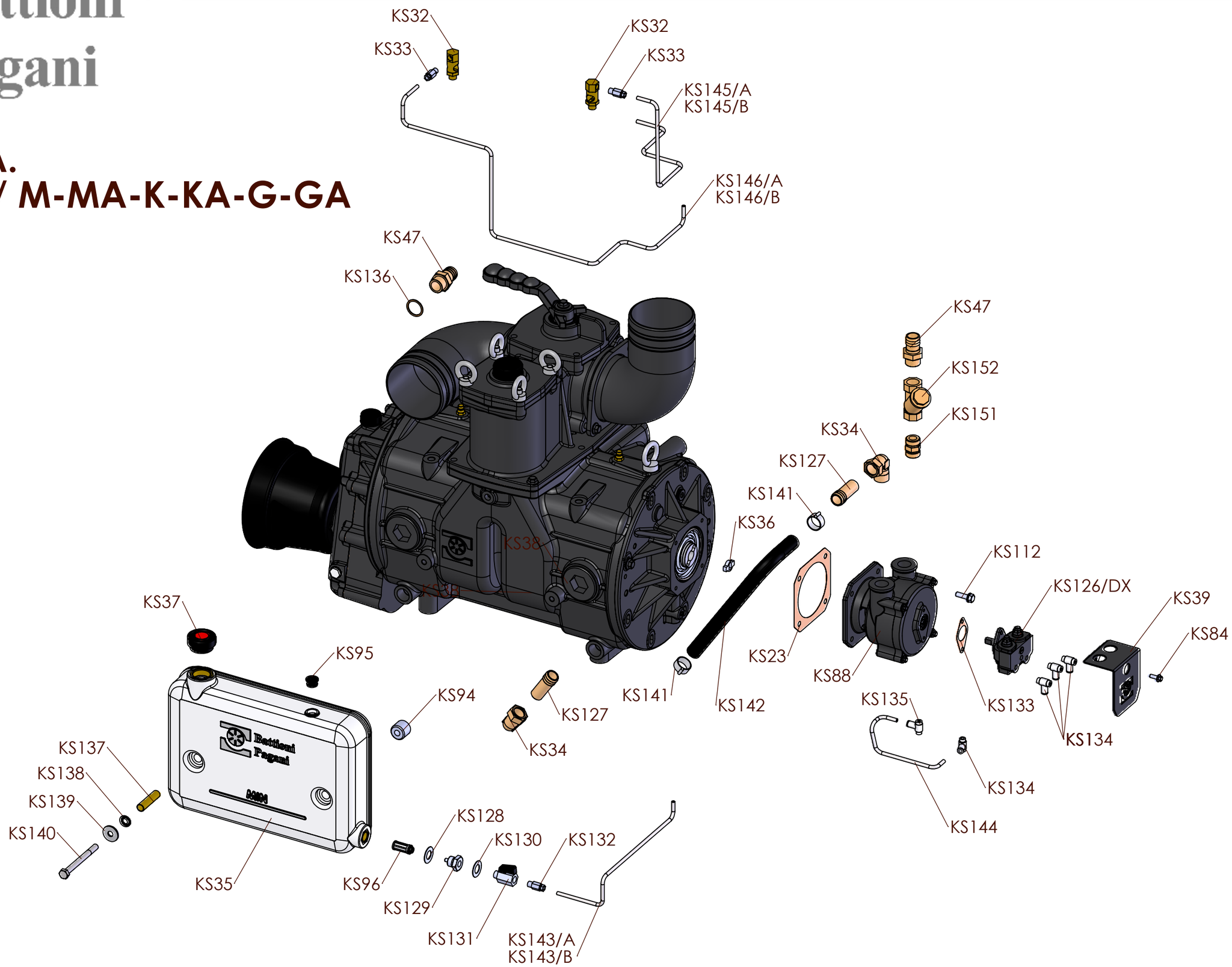

Battioni Pagani ®

COOLING L.A.
KPS 550-670 / P-D-H

Rev. 0 - 01/05/2021

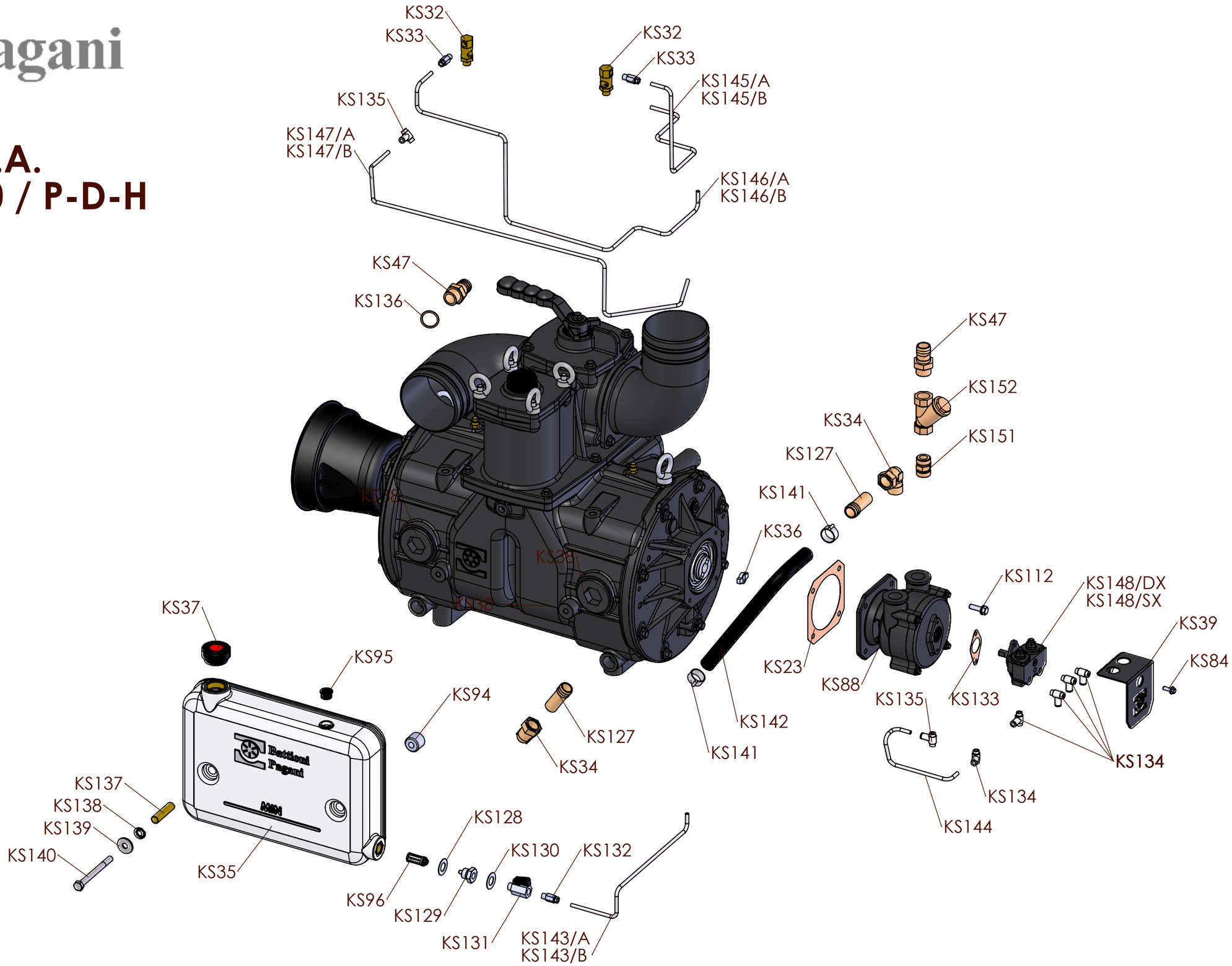

Battioni Pagani ®

COOLING L.A. ATEX
KPS 550-670 / P-H

Rev. 0 - 01/05/2021

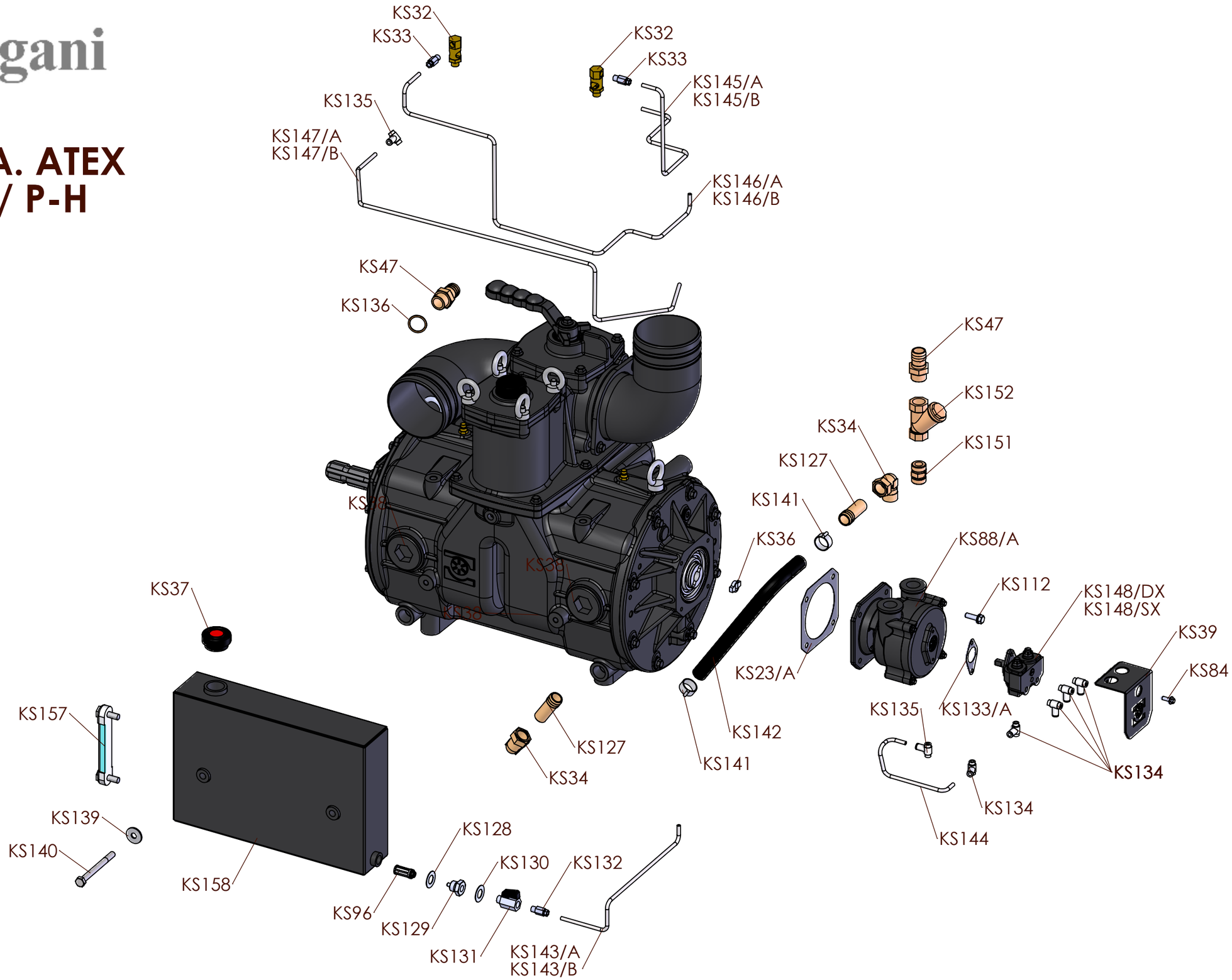

KPS 550-670

CODE	ARTICLE	DESCRIZIONE	DESCRIPTION	Q.TY	UM
KS1/A	4010101169	CORPO POMPA KPS 670 BALLAST	BODY - KPS 670 BALLAST	1	n
KS1/B	4010101170	CORPO POMPA KPS 550 BALLAST	BODY - KPS 550 BALLAST	1	n
KS1/A/ATEX	4010101195	CORPO POMPA KPS 670 BALLAST - ATEX	BODY - KPS 670 BALLAST - ATEX	1	n
KS1/B/ATEX	4010101194	CORPO POMPA KPS 550 BALLAST - ATEX	BODY - KPS 550 BALLAST - ATEX	1	n
KS2/A	4010220216	ROTORE COLATA CONTINUA KPS 670	DRIVE ROTOR - KPS 670	1	n
KS2/B	4010220223	ROTORE COLATA CONTINUA KPS 550	DRIVE ROTOR - KPS 550	1	n
KS3/A	4070113227	PALETTA KPS 670 500X82,5X7,5 LONG LIFE	LONG LIFE BLADE - KPS 670 500X82,5X7,5	6	n
KS3/B	4070113226	PALETTA KPS 550 410X82,5X7,5 LONG LIFE	LONG LIFE BLADE - KPS 550 410X82,5X7,5	6	n
KS4	5050207022	RONDELLA Ø 8X23x4 - DIN 6340	WASHER Ø 8X23X4 - DIN 6340	1	n
KS5	4010801043	MANIGLIA CON ATTACCO QUADRATO	HANDLE SQUARE CONNECTION	1	n
KS6	5030300015	PARAOLIO 35X50X7 TC	SEAL RING 35X50X7 TC	1	n
KS6/A	5030300053	PARAOLIO 35X50X7 TC - FKM	SEAL RING 35X50X7 TC - FKM	1	n
KS7/B	4010601186	COPERCHIO CILINDRO INVERT.COLLETT. Ø 100	REVERSING GEAR COVER Ø100	1	n
KS8	5050207031	RONDELLA PER CONO INVERT. MEC 9-11-13500	TEFLON WASHER REV.GEAR MEC 9-11-13500	1	n
KS9	4012007011	MOLLA MEC 9-11-13500	SPRING - MEC 9-11-13500	1	n
KS10/B	4010701021	CILINDRO INVERTITORE COLLETTORE Ø 100	REVERSING GEAR - MANIFOLD Ø 100	1	n
KS11	5060605005	TAPPO NERO D 1"1/2 GAS	PLUG D 1"1/2 GAS	1	n
KS12	5051206003	GOLFARE FEMMINA M10 CE ZINCATO-DIN580	FEMALE EYEBOLT M10 CE GALVANIZED-DIN580	4	n
KS13	4010601179	COPERCHIO FILTRO BALLAST 16000	FILTER COVER BALLAST 16000	1	n
KS14	5030300031	PARAOLIO 45X62X10	OIL SEAL 45X62X10	1	n
KS14/A	5030300057	PARAOLIO 45X62X10 - FKM	OIL SEAL 45X62X10 - FKM	1	n
KS15/B	5030210008	ANELLO TENUTA OR189	SEAL RING OR 189	2	n
KS15/B/A	5030210095	ANELLO TENUTA OR189 - FKM	SEAL RING OR 189 - FKM	2	n
KS16/B	4010406015	FLANGIA PREMICURVA Ø 100 - STAR	FLANGE FOR ELBOW MANIFOLD Ø 100 - STAR	2	n
KS16/C	4010406017	FLANGIA PREMICURVA Ø 80 - STAR	FLANGE FOR ELBOW MANIFOLD Ø 80 - STAR	2	n
KS17/B	4010901020	CURVA SCAR. ORIENT.MEC 9_13500-STAR Ø100	REVOLVING ELBOW Ø100	2	n
KS17/C	4010901019	CURVA SCAR. ORIENTABILE COLLET. Ø 80	REVOLVING ELBOW Ø 80	2	n
KS17/D	4010901018	CURVA SCAR. ORIENTABILE COLLET. Ø 76	REVOLVING ELBOW Ø 76	2	n
KS18	5050107054	VITE M 10X35 TE	SCREW M 10X35 TE	4	n
KS19	4050412015	PRIGIONIERO M 10X30 - UNI 15911	STUD BOLT M 10X30 - UNI 15911	4	n
KS20	5050906006	TAPPO Ø 16x1.5 - DIN 908	PLUG Ø 16x1.5 - DIN 908	1	n
KS21	5050202007	RONDELLA Ø 16X20X1,5 ALLUMINIO	ALUMINIUM WASHER Ø 16X20X1,5	1	n
KS22	5050107008	VITE M 6X16 TCEI	SCREW M 6X16 TCEI	16	n
KS23	4030108023	GUARN. COPERCHIO ANT. E POST. WPT-KPS	BACK COVER GASKET - WPT-KPS	1	n
KS23/A	4030108075	GUARN. COPERCHIO ANT. E POST. WPT-KPS - ATEX	BACK COVER GASKET - WPT-KPS - ATEX	1	n
KS24	5050903001	TAPPO M 10X1 - DIN 906	PLUG M10X1 - DIN 906	4	n
KS25	5050107109	VITE M 10X25 TEF - DIN 6921 ISO 8100	SCREW M 10X25 TEF - DIN 6921 ISO 8100	8	n
KS26	5012107049	CUSCINETTO A RULLI NU 309 - SKF	ROLL BEARING NU 309 - SKF	1	n
KS27	5030300045	PARAOLIO 60X75X10 DCP	SEAL RING 60X75X10 DCP	1	n
KS27/A	5030300036	PARAOLIO 60X75X10 DCP - FKM	SEAL RING 60X75X10 DCP - FKM	1	n
KS28	4010401074	FLANGIA ANT. POST. BALLAST 16000-KPS	FLANGE BALLAST 16000-KPS	1	n
KS29	5030210050	ANELLO TENUTA OR 4775	SEAL RING - OR 4775	1	n
KS30	4030108070	GUARN. FLANGIA KPS 550-670	FLANGE GASKET KPS 550-670	2	n
KS30/A	4030108076	GUARN. FLANGIA KPS 550-670 - ATEX	FLANGE GASKET KPS 550-670 - ATEX	2	n
KS31	4011907124	PERNO POSTERIORE BALLAST 16000 6P	REAR PIN BALLAST 16000 6P	1	n
KS32	5040200010	SPIA DI CONTROLLO FORO Ø 1/8" WSM	CONTROL SIGHT Ø 1/8" WSM HOLE	2	n
KS33	5040303016	VALVOLA UNIDIREZIONALE Ø 1/8"X6	CONNECTOR Ø 1/8" X6	2	n
KS34	5040300004	RACCORDO COMPLETO Ø 3/4"X22X90 RA KTS	COMPLETE CONNECTOR Ø 3/4"X22X90 RA KTS	2	n
KS35	4011406012	SERBATOIO OLIO STAMPATO	OIL TANK	1	n
KS36	4010006002	GIUNTO DI COLLEGAMENTO L.F.	CONNECTOR JOINT - L.F.	2	n
KS37	5060605014	TAPPO CARICO OLIO Ø 1" GAS	OIL PLUG Ø 1" GAS	1	n
KS38/A	5050906014	TAPPO Ø 1" 1/2 GAS - DIN 908	PLUG Ø 1"1/2 GAS - DIN 908	2	n
KS38/B	5050906007	TAPPO Ø 2" GAS - DIN 908	PLUG Ø 2" GAS - DIN 908	3	n
KS39	4060505049	PROTEZIONE POMPA LA 2-4 MANDATE	PUMP PROTECTION LA 2-4 WAYS	1	n
KS41	5051206004	GOLFARE MASCHIO M12-CE	EYEBOLT M 12-CE	2	n
KS42	4010601133	COPERCHIO ANTERIORE WPT-KPS/P-D	FRONT COVER WPT-KPS/P-D	1	n
KS43	5050107044	VITE M 10X20 TCEI	SCREW - M 10X20 TCEI	8	n
KS44	5050202013	RONDELLA Ø3/4"X32,5 RAME	COPPER WASHER Ø3/4"X32,5	2	n

KPS 550-670

CODE	ARTICLE	DESCRIZIONE	DESCRIPTION	Q.TY	UM
KS45	5050107103	VITE M10X50 TCEI -12,9	SCREW M 10X50 TCEI -12,9	12	n
KS46	5050300005	DADO AUTOBLOCCANTE M 30X2X19	SELF-LOCKING NUT M 30X2X19	1	n
KS47	5040303018	RACCORDO PORTATUBO Ø3/4" GAS	CONNECTOR Ø3/4" GAS	2	n
KS48	4030109054	GUARN. COPERCHIO LATERALE KPS	SIDE COVER GASKET KPS	1	n
KS48/A	4030109069	GUARN. COPERCHIO LATERALE KPS - ATEX	SIDE COVER GASKET KPS - ATEX	1	n
KS49	4010601188	COPERCHIO LATERALE CORPO KPS	SIDE BODY COVER KPS	1	n
KS49/A	4010601200	COPERCHIO LATERALE CORPO KPS / G-GA	SIDE BODY COVER KPS / G-GA	1	n
KS50	4030109055	GUARN. DIFFUSORE BALLAST 16000	DIFFUSER GASKED BALLAST 16000	1	n
KS50/A	4030109067	GUARN. DIFFUSORE BALLAST 16000 - ATEX	DIFFUSER GASKED BALLAST 16000 - ATEX	1	n
KS51	4010501035	DIFFUSORE BALLAST 16000	DIFFUSER BALLAST 16000	2	n
KS52	5040407006	RACCORDO DRITTO M/M 3/4" GAS	CONNECTOR M/M 3/4" GAS	2	n
KS53	5040303030	VALVOLA UNIDIREZIONALE Ø 3/4" BALLAST	UNIDIRECTIONAL VALVE Ø 3/4" BALLAST	2	n
KS54	5080005004	FILTRO ARIA VALV. UNID. 3/4"	UNIDIRECTIONAL VALVE AIR FILTER 3/4"	2	n
KS54/A	5080005005	FILTRO ARIA VALV. UNID. 3/4" QUADRATO / G-GA	UNIDIRECTIONAL VALVE AIR FILTER 3/4" SQUARE / G-G	2	n
KS55	5050507012	ANELLO SEEGER Ø 45 E	CIRCLIP Ø45 E	1	n
KS56	5040200017	RUBINETTO DI SPURGO Ø 1/4" GAS	FAUCET FOR BLEEDING Ø 1/4" GAS	2	n
KS57	4030109056	GUARN. COLLETTORE BALL.16000-KPS 550-670	MANIFOLD GASKET BALL.16000-KPS 550-670	1	n
KS57/A	4030109068	GUARN. COLLETTORE BALL.16000-KPS 550-670 -ATEX	MANIFOLD GASKET BALL.16000-KPS 550-670 - ATEX	1	n
KS58/B	4010501033	COLLETTORE BALLAST 16000	MANIFOLD BALLAST 16000	1	n
KS59	4010301032	SCATOLA MOLT. BALLAST 16000	GEARBOX BALLAST 16000	1	n
KS60/B	5030210083	ANELLO TENUTA OR 3525	SEAL RING 3525	1	n
KS60/B/A	5030210096	ANELLO TENUTA OR 3525 - FKM	SEAL RING 3525 - FKM	1	n
KS63	5050707033	CHIAVETTA 12X8X36	KEY 12X8X36	1	n
KS64	5050707016	CHIAVETTA 12X8X80	KEY 12X8X80	1	n
KS66/A	4020607045	PIGNONE DEC.GARDA WPT-B16/G Z45-M3 12MM	PINION DEC.GARDA WPT-B16/G Z45-M3	1	n
KS66/B	4020607042	PIGNONE DEC.GARDA WPT-B16/GA Z56-M3 12MM	PINION DEC.GARDA WPT-B16/GA Z56-M3	1	n
KS67	5012207003	ANELLO DI COMPENSAZIONE Ø 100	COMPRESSION THRUST RING Ø 100	2	n
KS68	5050107009	VITE M 8X20 TE	SCREW M 8X20 TE	4	n
KS69	4010401075	FLANGIA SUPPORTO DEC.BALLAST 16000/GA	FLANGE SUPPORT DEC.BALLAST 16000/GA	1	n
KS70	5050107028	VITE M 12X35 TE	SCREW M 12X35 TE	4	n
KS71	5050202004	RONDELLA D 1/2" GAS ALLUMINIO	ALUMINIUM WASHER D 1/2" GAS	1	n
KS72	5050507028	ANELLO SEEGER Ø 100 I	CIRCLIP Ø 100 I	2	n
KS73/A	5050300003	DADO AUTOB. M 30X2X25	SELF-LOCKING NUT M 30X2X25	1	n
KS73/B	5050300004	DADO AUTOB. M 36X2X25	SELF-LOCKING NUT M 36X2X25	1	n
KS74/M	4011907117	PERNO ANTERIORE BALLAST 16000/M-MA 6P	FRONT PIN BALLAST 16000/M-MA 6P	1	n
KS74/K	4011907121	PERNO ANTERIORE BALLAST 16000/K-KA 6P	FRONT PIN BALLAST 16000/K-KA 6P	1	n
KS74/D	4011907118	PERNO ANTERIORE BALLAST 16000/D 6P	FRONT PIN BALLAST 16000/D 6P	1	n
KS74/H	4011907119	PERNO ANTERIORE BALLAST 16000/H 6P	FRONT PIN BALLAST 16000/H 6P	1	n
KS74/G	4011907120	PERNO ANTERIORE BALLAST 16000/G-GA 6P	FRONT PIN BALLAST 16000/G-GA 6P	1	n
KS74/GA2	4011907122	PERNO ANTERIORE BALLAST 16000/GA 2 LEVE 6P	FRONT PIN BALLAST 16000/GA 2 LEVER 6P	1	n
KS74/P	4011907123	PERNO ANTERIORE BALLAST 16000/P 6P	FRONT PIN BALLAST 16000/P 6P	1	n
KS75	5012107052	CUSCINETTO A SFERE 6309 - SKF	ROLL BEARING 6309 - SKF	1	n
KS76	4020107018	MANICOTTO TRASM. MOT. IDR. STAR-WPT (II)	HYDRL. MOT. TRANSMISS. COUPLING STAR-WPT (II)	1	n
KS77	4011001043	SUPPORTO MOTORE IDR. WPT/HFR GR. 4	HYDR. MOTOR SUPPORT WPT/HFR GR. 4	1	n
KS78	6080200061	MOTORE IDR. KM 40.87 SO GR.4 COMPL.	HYDR. MOTOR KM 40.87 SO GR.4 COMPL.	1	n
KS79	4011707115	DISTANZIALE PERNO GA 2 LEVE	SPACER GA PIN 2 LEVERS	1	n
KS80/M	4020607060	PIGNONE BALLAST 16000/M Z23-M3	PINION BALLAST 16000/M Z 23-M3	1	n
KS80/MA	4020607061	PIGNONE BALLAST 16000/MA Z34-M3	PINION BALLAST 16000/MA Z 34-M3	1	n
KS81	4030108067	GUARN. COP. SCATOLA BALLAST 16000	GASKET GEARBOX COVER BALLAST 16000	1	n
KS82	4010601180	COPERCHIO SCATOLA MOLT. BALLAST 16000	GEARBOX COVER BALLAST 16000	1	n
KS83	4060505018	PROTEZIONE ALBERO GARDA-LEDRA CE	GUARD SHAFT GARDA-LEDRA CE	1	n
KS84	5050107107	VITE M 6x10 TEF - FL/ZIGR 8.8	SCREW M 6x10 TEF - FL/ZIGR 8.8	4	n
KS85	5060605011	TAPPO CARICO OLIO 3/8" GAS	OIL PLUG 3/8" GAS	1	n
KS86	4030108021	GUARN. COP. SCATOLA STAR K-KA	COVER GASKET STAR K-KA	1	n
KS87/K	4010601119	COPERCHIO SCATOLA MOLT. STAR / K G.2-G.3	COVER GEARBOX STAR / K G.2-G.3	1	n
KS87/KA	4010601147	COPERCHIO SCATOLA MOLT. STAR / KA G.2-G.3	COVER GEARBOX STAR / KA G.2-G.3	1	n
KS88	6080200388	POMPA RA KPS 550-670 COMPLETA 30 LT/MIN	COMPLETE WATER COOLING BACKPUMP KPS 550-670	1	n
KS88/A	6080200490	POMPA RA KPS 550-670 COMPLETA - ATEX	COMPLETE WATER COOLING BACK PUMP - ATEX	1	n

KPS 550-670

CODE	ARTICLE	DESCRIZIONE	DESCRIPTION	Q.TY	UM
KS89	5050300016	DADO AUTOBLOCCANTE M 10X1,5 VERGAL	SELF-LOCKING NUT M 10X1,5 VERGAL	1	n
KS90	5050207008	RONDELLA TRANCIATA Ø 10X40	BLANK WASHER - Ø 10X40	1	n
KS91/A	4012007015	MOLLA PIATTELLO Ø100 BALLAST-AIDA	SPRING FOR VALVE Ø100 BALLAST-AIDA	1	n
KS92	4011707114	GUIDA PIATTELLO BALLAST-AIDA	GUIDE FOR VALVE BALLAST-AIDA	1	n
KS93/A	4010006026	PIATTELLO COMPLETO Ø 100 BALLAST 16000	POPPET VALVE FOR BALLAST 16000 - Ø100	1	n
KS94	4011707112	DISTANZIALE SERBATOIO PLASTICA	SPACER FOR PLASTIC TANK	2	n
KS95	4060310001	PASSATUBO CHIUSO	CLOSED TUBE-PASS	1	n
KS96	5080005001	FILTRO OLIO	OIL FILTER	1	n
KS97	4020807027	RUOTA DENTATA GARDA EVO Z56-M3	GEAR - Z56-M3 GARDA EVO	1	n
KS98	4020907069	ALBERO CONVERSIONE GARDA / T	SPLINED SLEEVE GARDA / T	1	n
KS99	5050107016	VITE M 8x25 TCEI	SCREW M 8x25 TCEI	8	n
KS100	4011707055	RONDELLA BLOCCAGGIO CALETTATO GARDA TS	SPLINED SMOOTH WASHER - GARDA TS	1	n
KS101	4020107034	MOZZO SCORREVOLE GARDA EVO	SLIDING SLEEVE - GARDA EVO	1	n
KS102	5050507029	ANELLO SEEGER Ø 55 E - DIN 471	CIRCLIP - Ø 55 E - DIN 471	1	n
KS103	5060605001	TAPPO CARICO OLIO Ø3/8" GAS	OIL PLUG - Ø3/8" GAS	1	n
KS104	5030210079	ANELLO DI TENUTA OR 2093 - 23,52X1,78	SEAL RING - OR 2093 - 23,52X1,78	2	n
KS105	5012107050	CUSCINETTO A SFERE 6308 - SKF	BALL BEARING 6308 - SKF	1	n
KS106	5012107051	CUSCINETTO A SFERE 6306 - SKF	BALL BEARING 6306 - SKF	1	n
KS107	5030300014	PARAOLIO 40X62X10	OIL SEAL 40X62X10	1	n
KS108	5060105004	TAPPO LIVELLO OLIO Ø 3/8" GAS	OIL LEVEL PLUG Ø 3/8" GAS	1	n
KS109/M	4020507015	INGR. CON ALBERO BALLAST 16000/M Z58-M3	GEAR WITH SHAFT BALLAST 16000/M Z58-M3	1	n
KS109/MA	4020507016	INGR. CON ALBERO BALLAST 16000/MA Z47-M3	GEAR WITH SHAFT BALLAST 16000/MA Z47-M3	1	n
KS110	5050906008	TAPPO 3/8" GAS	PLUG 3/8" GAS	1	n
KS111	5050202008	RONDELLA Ø17X22X1,5 ALLUMINIO	ALUMINIUM WASHER Ø 17X22X1,5	1	n
KS112	5050107108	VITE M8X25 TEF	SCREW M8X25 TEF	12	n
KS113	4010301033	SCATOLA MOLT. BALLAST 16000 K-KA	GEARBOX-BALLAST 16000 K-KA	1	n
KS114/K	4020507005	INGR. CON ALBERO BALLAST 16000/K Z52-M2,5	GEAR WITH SHAFT BALLAST 16000/K Z52-M2,5	1	n
KS114/KA	4020507009	INGR. CON ALBERO BALLAST 16000/KA Z44-M2,5	GEAR WITH SHAFT BALLAST 16000/KA Z44-M2,5	1	n
KS115/K	4020607040	PIGNONE / K Z26-M2,5	PINION / K Z26-M2,5	1	n
KS115/KA	4020607041	PIGNONE / KA Z34-M2,5	PINION / KA Z34-M2,5	1	n
KS116	5050107050	VITE M10X90 TCEI	SCREW M10X90 TCEI	4	n
KS117	4030110023	GUARN. SUPP. POMPA IDR. G.2 E G.3	HYDR. PUMP SUPPORT GASKET G.2 E G.3	1	n
KS118/2	6080200128	SUPPORTO POMPA IDRAULICA G.2	HYDRAULIC PUMP SUPPORT G.2	1	n
KS118/3	6080200129	SUPPORTO POMPA IDRAULICA G.3	HYDRAULIC PUMP SUPPORT G.3	1	n
KS119	5030300016	PARAOLIO 65X85X10	OIL SEAL 65X85X10	1	n
KS119/A	5030300038	PARAOLIO 65X85X10 - FKM	OIL SEAL 65X85X10 - FKM	1	n
KS120	4030108028	GUARN. SUPP. MOTORE IDR. G.4	HYDR. MOTOR SUPPORT GASKET G.4	1	n
KS120/A	4030108060	GUARN. SUPP. MOTORE IDR. G.4 - ATEX	HYDR. MOTOR SUPPORT GASKET G.4 - ATEX	1	n
KS121	5050107061	VITE M12X45 TCEI	SCREW M12X45 TCEI	4	n
KS122	5050107020	VITE M10X25 TE	SCREW M10X25 TE	1	n
KS123	5050207004	RONDELLA Ø 10	SMOOTH WASHER Ø 10	1	n
KS124	5050707028	CHIAVETTA 12X8X50	KEY 12X8X50	1	n
KS125	4011707116	DISTANZIALE BALLAST 16000 G-GA	SPACER BALLAST 16000 PIN G-GA	1	n
KS126/DX	5080200025	POMPA L.A. 3 MANDATE AC DX	OIL PUMP- L.A.3 WAYS AC DX	1	n
KS127	4011707087	RACCORDO PORTATUBO Ø 25	CONNECTOR Ø 25	1	n
KS128	5050202002	RONDELLA Ø10X16 ALLUMINIO	ALUMINIUM WASHER Ø10X16	1	n
KS129	4040407001	RIDUZIONE PORTAFILTRO	REDUCTION FILTER	1	n
KS130	5050202003	RONDELLA Ø1/4" GAS	WASHER Ø1/4" GAS	1	n
KS131	5040200001	RUBINETTO SERBATOIO OLIO Ø 1/4" GAS	OIL TANK DRAIN COCK - Ø 1/4" GAS	1	n
KS132	5040303015	RACCORDO DRITTO 1/4"X6	CONNECTOR 1/4"X6	1	n
KS133	4030108011	GUARNIZIONE POMPA OLIO L.A.	OIL PUMP GASKET - L.A.	1	n
KS133/A	4030108059	GUARNIZIONE POMPA OLIO L.A. ATEX	OIL PUMP GASKET - L.A. ATEX	1	n
KS134	5040303017	RACCORDO 1/8"X6 X90° RAME	CONNECTOR 1/8"X6X90° COPPER	5	n
KS135	5040303007	RACCORDO 1/8"X6 X90° RILSAN	CONNECTOR 1/8"X6X90° RILSAN	1	n
KS137	4011707113	INSERTO OTTONE SERBATOIO PLASTICA	INSERT BRASS OIL TANK	2	n
KS138	4060310005	RONDELLA IN GOMMA Ø25,9X15X3	RUBBER WASHER Ø25,9X15X3	2	n
KS139	5050207038	RONDELLA Ø 10X25X1,5 - UNI 1739	SMOOTH WASHER Ø 10X25X1,5 - UNI 1739	2	n
KS140	5050107106	VITE ZINCATA M10X100 TE	GALVANIZED SCREW M10X100 TE	2	n

KPS 550-670

CODE	ARTICLE	DESCRIZIONE	DESCRIPTION	Q.TY	UM
KS141	5100706013	FASCETTA STRINGITUBO Ø 40 (25-40) INOX	CLAMP Ø 40 (25-40) INOX	2	n
KS142	5080115011	TUBO IN GOMMA Ø 25X35	RUBBER HOSE Ø 25X35	0,43	m
KS143/A	5080115002	TUBO IN RAME Ø6X1 - KPS 550	COPPER HOSE Ø6X1 - KPS 550	0,61	m
KS143/B	5080115002	TUBO IN RAME Ø6X1 - KPS 670	COPPER HOSE Ø6X1 - KPS 670	0,64	m
KS144	5080115002	TUBO IN RAME Ø6X1 - KPS 550-670	COPPER HOSE Ø6X1 - KPS 550-670	0,24	m
KS145/A	5080115002	TUBO IN RAME Ø6X1 - KPS 550	COPPER HOSE Ø6X1 - KPS 550	0,65	m
KS145/B	5080115002	TUBO IN RAME Ø6X1 - KPS 670	COPPER HOSE Ø6X1 - KPS 670	0,71	m
KS146/A	5080115002	TUBO IN RAME Ø6X1 - KPS 550	COPPER HOSE Ø6X1 - KPS 550	1,19	m
KS146/B	5080115002	TUBO IN RAME Ø6X1 - KPS 670	COPPER HOSE Ø6X1 - KPS 670	1,26	m
KS147/A	5080115002	TUBO IN RAME Ø6X1 - KPS 550	COPPER HOSE Ø6X1 - KPS 550	1,39	m
KS147/B	5080115002	TUBO IN RAME Ø6X1 - KPS 670	COPPER HOSE Ø6X1 - KPS 670	1,46	m
KS148/DX	5080200029	POMPA L.A. 4 MANDATE AC DX	OIL PUMP- L.A.4 WAYS AC DX	1	n
KS148/SX	5080200031	POMPA L.A. 4 MANDATE AC SX	OIL PUMP- L.A.4 WAYS AC SX	1	n
KS149	6010202011	KIT GUARNIZIONI KPS 550-670	SEALS KIT KPS 550-670	1	n
KS151	5040407009	NIPPLO M/M 3/4" GAS	NIPPLES M/M 3/4" GAS	1	n
KS152	5080005006	FILTRO ACQUA OTTONE 3/4" GAS	WATER FILTER 3/4" GAS	1	n
KS153	5050202016	RONDELLA Ø 1"1/2 GAS ALLUMINIO	WASHER Ø 1"1/2 GAS - ALUMINIUM	2	n
KS154	5050202006	RONDELLA Ø 2" GAS ALLUMINIO	WASHER Ø 2" GAS - ALUMINIUM	3	n
KS155	5050906010	TAPPO Ø 3/4" GAS	PLUG Ø 3/4" GAS	1	n
KS156/A	5090000123	TERMOSTATO - POZZ. 1/2" GAS	TEMPERATURE SWITCH - POZZ. 1/2" GAS	1	n
KS157	5060105006	LIVELLO OLIO COMPLETO SLVT 127	COMPLETE OIL LEVEL - SLVT 127	1	n
KS158	4011406014	SERBATOIO OLIO ATEX	SIDE OIL TANK ATEX	1	n
KP150	6010201088	KIT REVISIONE POMPA KPS 550 LONG LIFE	REBUILD KIT KPS 550 LONG LIFE	1	n
KPS150	6010201089	KIT REVISIONE POMPA KPS 670 LONG LIFE	REBUILD KIT KPS 670 LONG LIFE	1	n
LUBR_OIL	5070200100	OLIO BATTIONI PAGANI (5LT)	BATTIONI PAGANI VACUUM PUMP OIL (5LT)	1	n

Battioni ®
Pagani

Setting the pace since 1953

0	01.05.2021	I° EMISSIONE	PROG	R DT	AM
REV.	DATA	MOTIVO	PREPARATO	APPROVATO	AUTORIZZATO

Battioni ®
Pagani

Setting the pace since 1953

Via Cav. Enzo Ferrari, 2
43058 Ramoscello di Sorbolo (PR) - Italy

Ph. +39 0521 663203
Fax +39 0521 663206

www.bapag.it
info@bapag.it